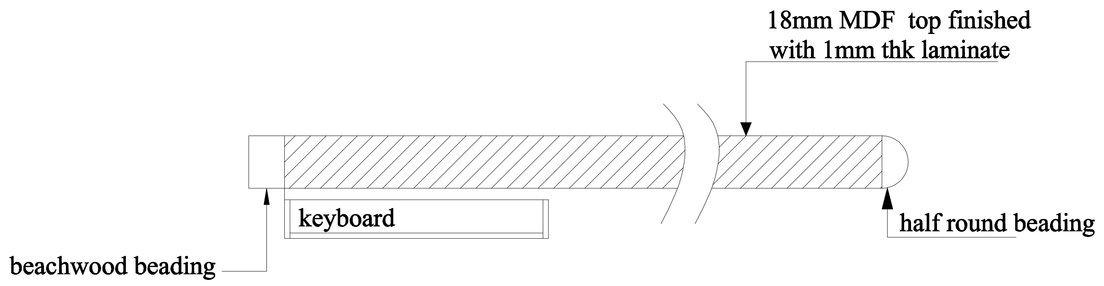

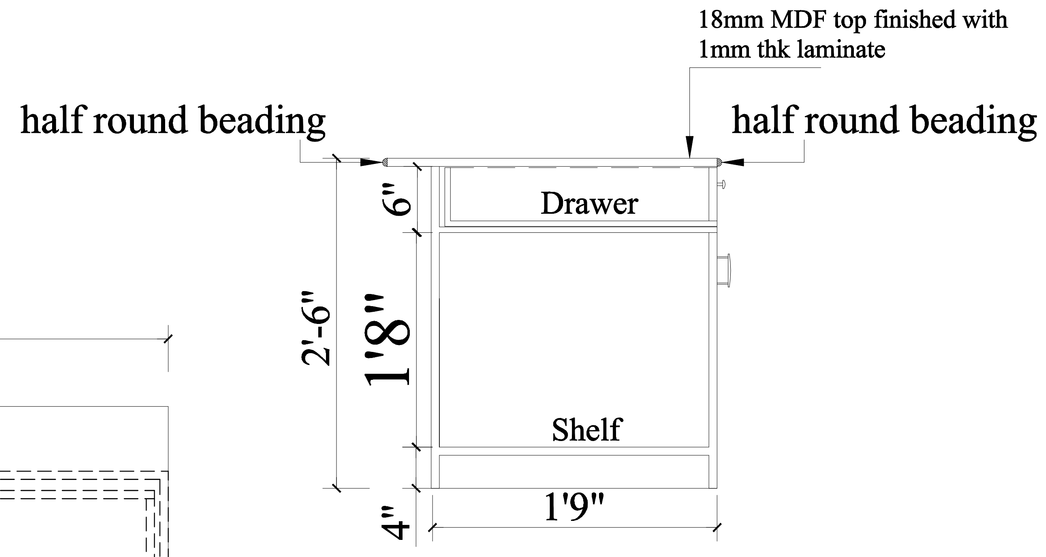

Drawer section

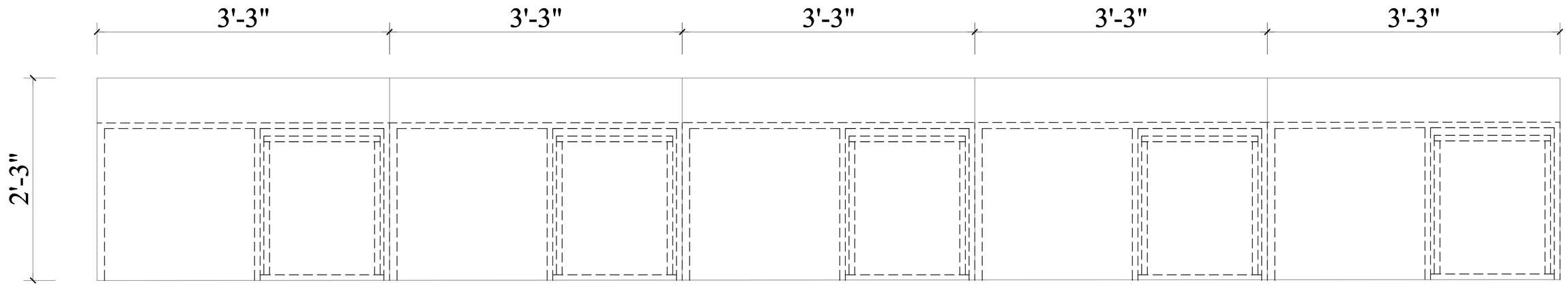

Plan

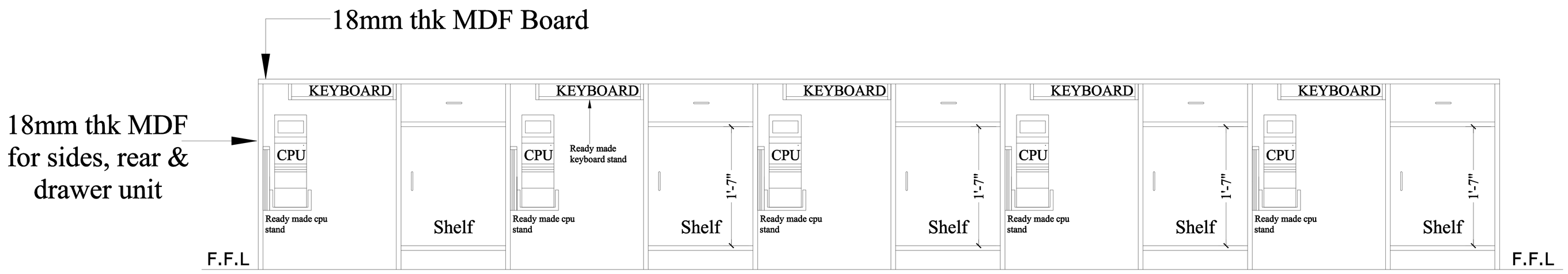

Elevation

NOTE:1)All Dimensions are in mm, feet & inches
2)Do not scale the Dwg.,Only written Dimensions are to be followed

REV	DESCRIPTION	DATE

CLIENT: BALMER LAWRIE

PROJECT: BL LOGISTICS
SHAMSHABAD

DWG TITLE:TYPICAL DETAILS OF
RUNNING COUNTERS

DATE :17-01-2017	DRAWN: A.RAHMAN
SHEET - 06	CHECKED: K.N.C
SCALE : N.T.S	APPROVED: K.N.C

OWNERS SIGNATURE

INDRAPRASTA CONSULTANTS
STRUCTURAL ENGINEERS, ARCHITECTS, INTERIOR DESIGNERS
810, 2nd floor, Flat # 302, Rd. # 2, Castle Hills, Masab tank, Hyderabad.
Phone No. 23535442, 98480-25598.
E-Mail :chandrashekaran.ks@gmail.com